Installation Instructions

P1752_P2000_P2002_15905C Embedded Staff Control Cable Routing Path

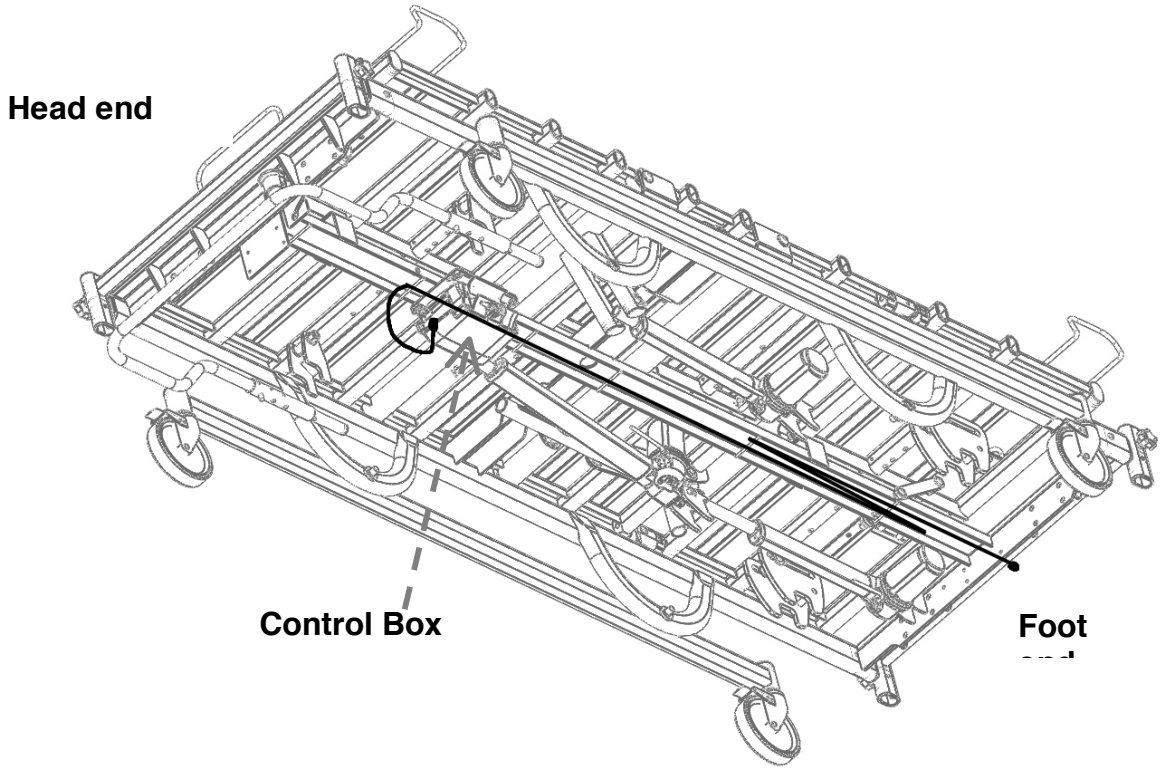

1. Unplug the main cable. Remove the access cover on the control box. Use a standard tip screwdriver and carefully push the tabs in to remove the cover as shown.

99 SEAVIEW BLVD.
PORT WASHINGTON, NY 11050
PHONE | 877-374-8763
FAX | 516-998-4601
WWW.DRIVEMEDICAL.COM

The information in this document is subject to change without notice.

2. Remove bypass plug from thecontrol box. Bypass plug is the one without a cord to the far right.

   NOTE: The bed will not function without the bypass plug or the staff control being plugged into the control box.

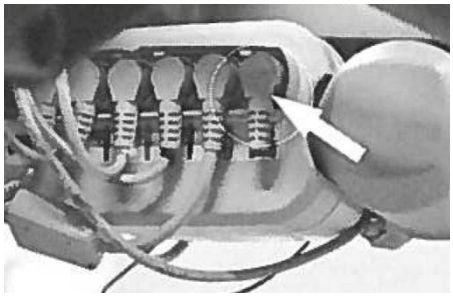

Bypass Plug

3. Plug the male end of the extension cable into the control box where the bypass plug was removed.

4. Route the cable over the top of control box inside the wire channel. Secure cable in position with cables ties.

5. Fasten the female end of the extension cable in the center of the bed on the foot-end frame tube. Excess cable must be secured to bedframe in the wire channel. Ensure when the footboard control panel cable is connected to the extension cable it does not create a trip hazard.

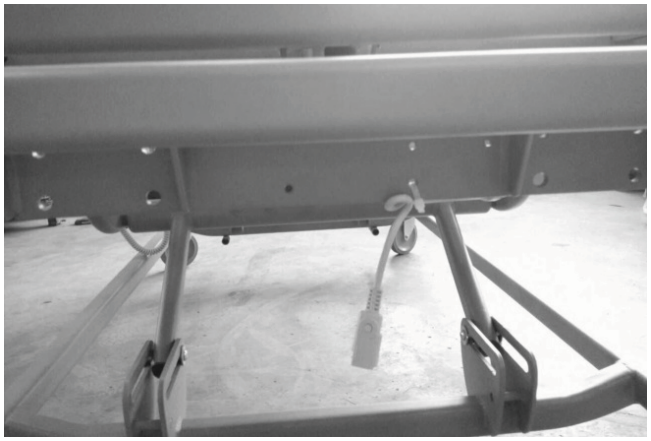

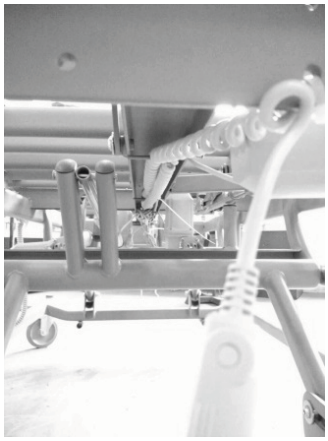

99 SEAVIEW BLVD.
PORT WASHINGTON, NY 11050
PHONE | 877-374-8763
FAX | 516-998-4601
WWW.DRIVEMEDICAL.COM

The information in this document is subject to change without notice.

6. Inspect entire cable path to ensure there is no interference with any moving parts. Replace the access cover on the control box. Test all functions for proper operation using footboard control panel.

WARNING

- Ensure all cables are properly secured to the bed frame eliminating possible trip hazards.
- DO NOT plug anything into the control box of bed (i.e. pendants and actuators) while mains cable (power cord) is plugged into the wall outlet.
- Any cords used on or with this bed MUST be routed and secured properly to ensure that they do NOT become entangled, kinked or severed during normal operation of the bed.
- See product owner's manual for complete safety warnings.

99 SEAVIEW BLVD.
PORT WASHINGTON, NY 11050
PHONE | 877-374-8763
FAX | 516-998-4601
WWW.DRIVEMEDICAL.COM

The information in this document is subject to change without notice.